10
17

endrichnews

www.endrich.com

IN MEMORIAM
Ursula Endrich
19.09.2017

Wir bedauern den allzu frühen Tod unserer Senior Chefin und Mitbegründerin unserer Firmengruppe, Frau Ursula Endrich.

Frau Ursula Endrich hat zusammen mit ihrem Ehemann, Wolfgang Endrich, unsere Firma 1976 aus allerkleinsten Anfängen heraus gegründet. Das bedeutete neben der Bürotätigkeit auch harte, körperliche Arbeit beim Versand unserer Produkte, wozu sie sich nie zu schade war.

Frau Ursula Endrich war vom Studium her Textilingenieurin, hat sich aber mit viel Ehrgeiz in das ihr unbekannte Gebiet der Elektronik und seiner Bauelemente eingearbeitet.

Mit dem Größerwerden unserer Firma übernahm sie die Aufgaben eines Controllers und die Leitung unserer Finanzabteilung, die sie mit Umsicht jahrzehntelang äußerst erfolgreich geführt hat.

Wir verlieren mit unserer Senior Chefin einen liebenswerten Menschen, der uns noch lange als Vorbild dienen wird.
Fürsorglich hatte sie vor einem geplanten Urlaub alle nötigen Dispositionen getroffen, so dass der Übergang aller Geschäfte auf die jetzige alleinige Geschäftsführerin, Frau Dr. Christiane Endrich, reibungslos erfolgen konnte.

Wir werden diese herausragende Persönlichkeit und Unternehmerin vermissen und ihr ein ehrendes Gedenken bewahren.

Geschäftsführung und Belegschaft
der Firmengruppe Endrich

TUNING FORK CRYSTALS 32.768 KHZ LOW ESR AND EXTENDED TEMP RANGE -40 TO 125°C

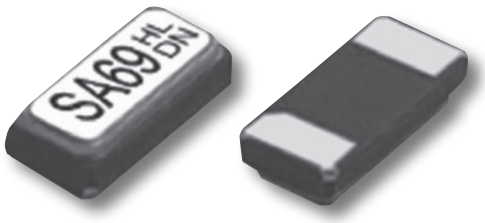

Due to the ongoing miniaturization of electronic devices, manufacturers of passive and active components strive to reduce their component design. This applies also to clock crystals which are widely used in applications as home automation, metering or mobile phones requiring a precise timing frequency. The time reference is provided often by tuning fork quartzes. Based on the 32.768 kHz, the one-second interval is generated by dividing the frequency.

The effect of the miniaturization of conventional quartz is often underestimated. Reducing the size means in most cases also reduction of the inner quartz blank. This usually causes an increase of the ESR value (Equivalent Series Resistance). But precisely this resistance should be as low as possible in order to ensure a high "Q"-value and reliable start of oscillation. In addition take into account that a higher ESR will increase the power consumption. Because in order to maintain the quartz oscillating it is necessary to permanently supply the crystal with energy and the higher ESR cause bigger losses. Since the frequency of the processors increases as well over last time, keep in mind that effects of EMI became more important in quartz design.

Fortunately SMI INC. offers a solution in a very small 3.2 x 1.5 mm package for the challenges of an oscillator design. The standard 31M327BRR offers a ESR of just 40 kOhm max. An improvement of approximately 40% compared to the usual ESR of 70 kOhm for a 3.2 x 1.5 mm tuning fork design. This tuning fork is therefore perfectly suited in application using battery power supply as „low power micro computer" applications. The crystals are manufactured with most common load capacitance of 12.5 pF. 9.0 pF, 6.0 pF are also feasible.

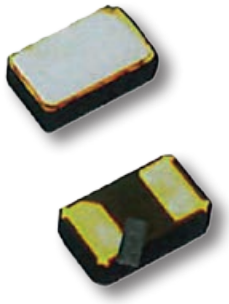

For harsh environment SMI released an ultra small SMD Tuning Fork Crystal suitable for the extended temperature range of -40 up to 125°C. The 212M327B-HAT is produced in a package size 2 x 1.2 x 0.5 mm with 3 Kpcs taped on reel.

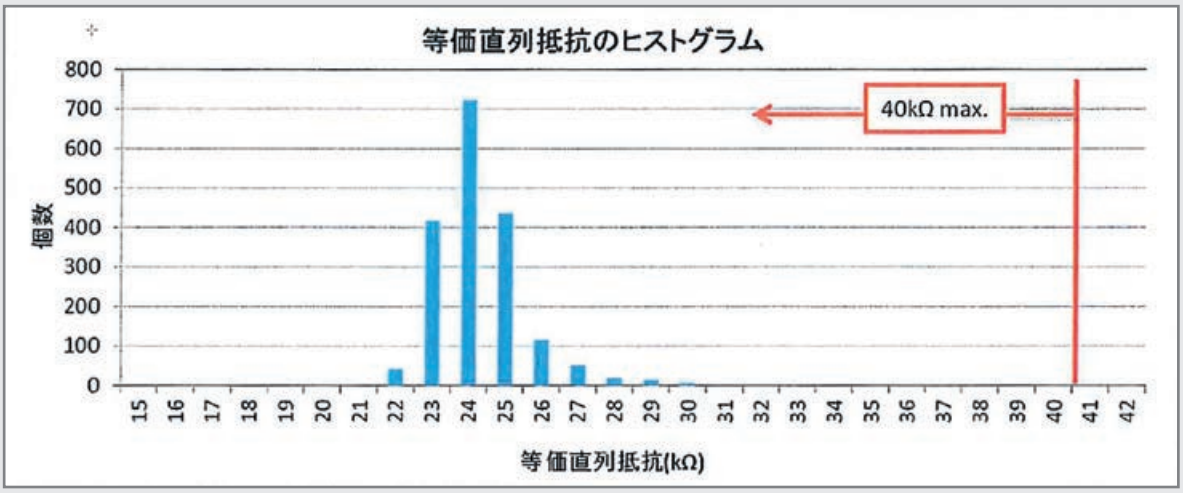

Contact for information: Mr. Gensler · Tel.: +49(0)7452-6007-31 · e-mail: a.gensler@endrich.com

AEC-Q200 QUALIFIED ESD GUARDS

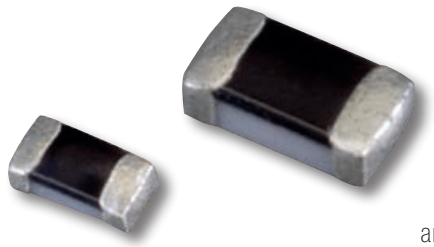

Inpaq's ESD Guard AM series is designed to protect single-line and multiple line **automotive applications** against high ESD voltages (IEC61000-4-2 Level 4). The single line ESD solutions are offered in compact sizes of EIA 0402 and 0603. These devices offer extremely low capacitance (< 0.2 pF), resulting in zero signal distortion for high speed digital I/O transmission applications (IEEE1394, USB 2.0/3.0, DVI, HDMI, DisplayPort, ... etc.) with less differential mismatching. The components are especially suitable for additional RF antenna front-ends or analog ICs.

FEATURES & BENEFITS

- High ESD protection
  -> 8 kV / 15 kV according IEC61000-4-2 level 4
- Extrem low capacitance (< 0.2 pF)
  -> No mismatching concerns during high speed transmission
- Excellent low leakage current
  -> Lower power consumption & high reliability
- Low insertion loss / high cut-off frequency

APPLICATIONS

- Automotive high speed signal interfaces
- Antenna circuits
- RF Modules
- RF ID
- USB 2.0, 3.0 and 3.1
- IEEE1394
- DVI
- HDMI 1.3, 1.4 and 2.0
- MIPI
- Display ports
- LVDS

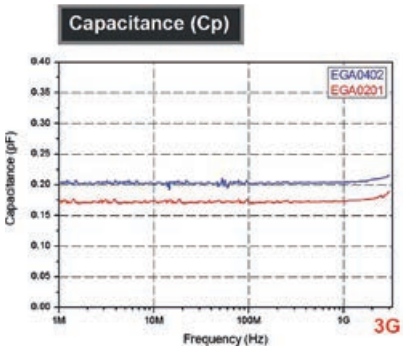

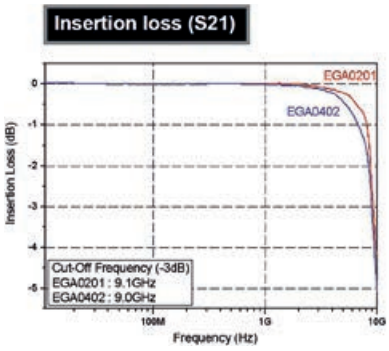

ELECTRICAL SPECIFICATION

CHARACTERISTIC	SYMBOL	UNIT	EGA10402V05AM	EGA10402V12AM	EGA10402V24AM	EGA10603V05AM	EGA10603V12AM	EGA10603V24AM
Rated voltage (max)	V_{DC}	V	5	12	24	5	12	24
Leakage current	IL	µA	0.01					
Peak voltage	Vp	V typ.	300					
Trigger voltage	Vt	V typ.	300					
Clamping voltage	Vc	V typ.	30					
Capacitance, @ 1 MHz	Cp	pF	0.2					
Response time		ns	< 1					
ESD voltage capability: IEC 61000-4-2 Contact discharge mode		kV	8					
ESD voltage capability: IEC 61000-4-2 Air discharge mode		kV	15					
ESD withstand pulses		pulses	1000					

Contact for information: Mr. Kiraly · Tel.: +49(0)7452-6007-63 · e-mail: m.kiraly@endrich.com

SSM SUSUMU
Thin Film Specialist and Innovator

PRE- ANNOUNCEMENT: FRG- SERIES: FUSIBLE THIN FILM CHIP RESISTORS (UNDER DEVELOPMENT)

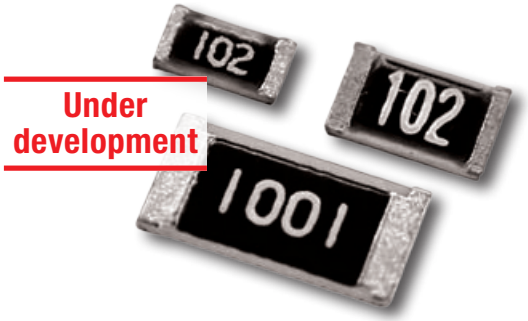

Thin film expert Susumu pre- announces the new FRG series which are thin film precision resistors, that bring all the well known advantages of their best seller product RG series with them, plus the additional feature to act as fuse. FRG series offers high accuracy, best long term stability and low current noise. The fusible feature offers controlled opening of circuit under a defined characteristic – select from three performances A, B & C type to match your requirements.

FEATURES

- High precision thin film chip resistors with fusing function
- Function as precision resistor under normal condition
- Resistance tolerance: ±0.1 % TCR: ±25 ppm/°C
- Function as fusible resistors to protect the circuit under overload voltage condition

APPLICATIONS

- Automotive electronics
- Robots, factory automation equipments
- Industrial measurement instrumentation
- Medical electronics

ELECTRICAL SPECIFICATION

TYPE	POWER RATING FUSING TYPE A	POWER RATING FUSING TYPE B	POWER RATING FUSING TYPE C	TCR [ppm/°C]	RESISTANCE RANGE [Ω] ±0.5 % [D] & ±0.1 % [B]	MAXIMUM VOLTAGE	RESISTANCE VALUE SERIES	OPERATING TEMPERATURE	PACKING QUANTITY
FRG1608	-	1/10 W	1/10 W	±25(P) ±50(Q)	100 - 10 K	75 V	E-24	-55°C ~ 155°C	T1 T5
FRG2012	-	1/8 W	1/8 W	±25(P) ±50(Q)	100 - 10 K	100 V			
FRG3216	1/4 W	1/4 W	-	±25(P) ±50(Q)	100 - 10 K	150 V			

FUSING PERFORMANCE

	FUSING PERFORMANCE TYPE	FUSING POWER [TYP.]	FUSING TIME	INSULATION RESISTANCE
Type A	5.0 W	1 s		10 MΩ @ 100 V
Type B	3.5 W			
Type C	2.5 W			

<Notes> Please note that this device is still under the development and therefore the design and specifications and design are subject to change.

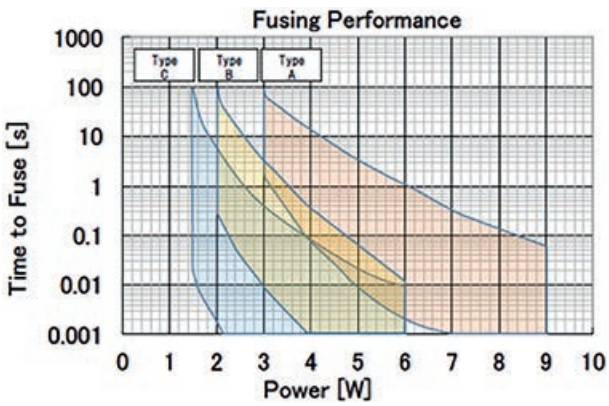

Contact for information: Mr. Jung · Tel.: +49(0)7452-6007-26 · e-mail: t.jung@endrich.com

K-BAND DISTANCE MEASUREMENT SENSOR MODULE

The NJR4234BV is a sensor module that can measure the distance to a moving object such as a pedestrian more than 30 m ahead and incorporates a 24 GHz band microwave circuit, antenna, and signal processing circuit in a low profile package of 38 x 38 x 4.2 mm.
As a sensor capable of distance measurement using microwave, it is possible to detect moving objects by innovative proprietary signal processing and also has the function to calculate and output the distance to the moving objects in indoor and outdoor environments. In addition, it has the unique algorithm to prevent radio interference, possible to use multiple sensors under the same location.
It can be used as a sensor front end with built-in primary signal processing for distance measurement. In addition, since it can be easily connected to other equipment via the UART interface, it can be used in a wide range of applications.

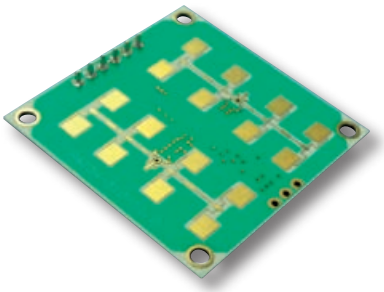

APPLICATIONS

Various equipment control by moving objects detection and measurement

- Security equipment
- Traffic control system
- Factory robot
- Industrial drone
- Parking management system

FEATURES

- Distance measurement sensor using the 24 GHz microwave
- Measurement distance of 30 m for a pedestrian [1]
- Antenna, Microwave RF circuit, Base-band IF circuit, MCU and also signal processing are integrated in a low-profile package
- Low-power-consumption
  37 mA @ 3.3 V power supply [2]
- Unique Signal Processing / Algorithm Installation
  - High sensitivity mobile object detection (Patented Technology)
  - Distance measurement signal processing
  - Automatic calibration and gain control
  - Radio interference prevention
- Adopted UART and digital CMOS output for interface
- Possible to be installed in indoor and outdoor locations
- Evaluation Kit available

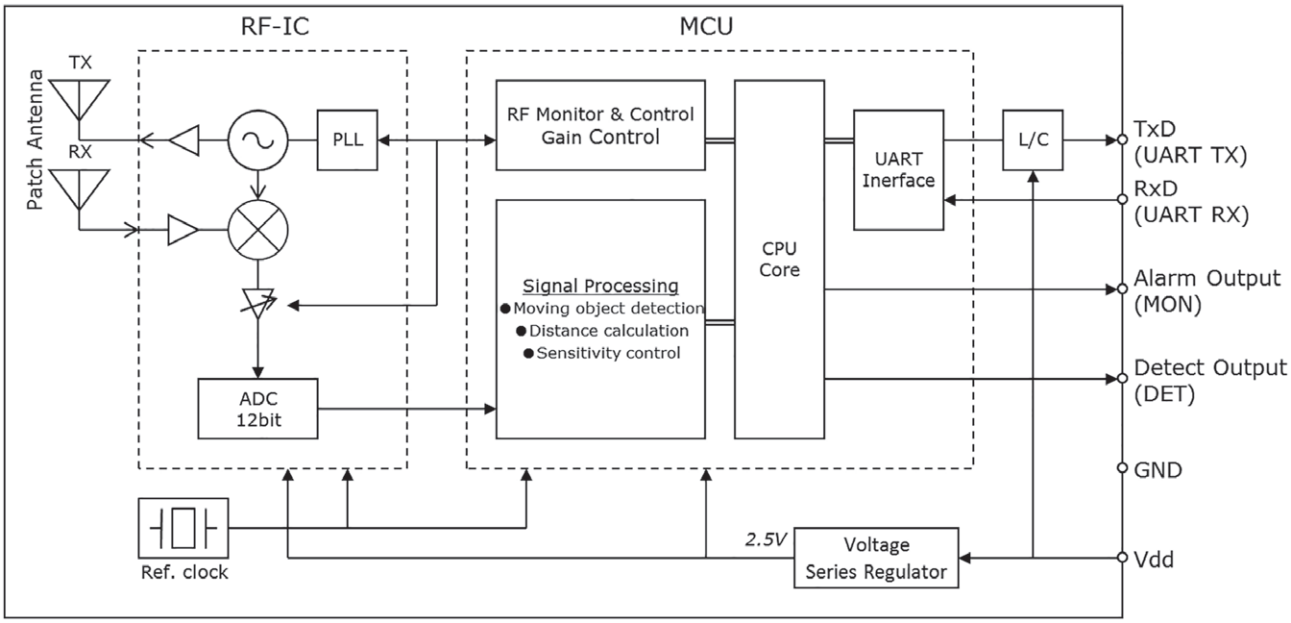

[1] Distance measurement 30 m is based on evaluation results. It varies depending on the reflection intensity of the moving object.
[2] It is realized by intermittent operation and measurement repetition time. Please use the power supply circuit for the peak current.

Contact for information: Mr. Wolf · Tel.: +49(0)7452-6007-23 · e-mail: t.wolf@endrich.com

MPQ4430 FAMILY (36 V, 1 ... 3.5 A)

Automotive Systems

Industrial
Power Systems

APPLICATIONS

- Automotive Systems
  - Infotainment
  - Telematics
  - Cluster
  - Gateway
- Industrial Power Systems

WHY USE THIS PART?

It's simple and easy!

- Low quiescent current in standby
- Improved efficiency performance and EMI
- Minimal external components
- Simplified layout
- Small package saves space
- Highly efficient output current
- Integrated internal high-side and low-side MOSFETs

FEATURES

- 10 µA Operating current in sleep mode
- Fixed output options*: 5 V, 3.3 V
- Synchronizable in-phase and 180°
- Hiccup over-current protection
- PG, ext. SS, forced CCM
- 80 ns Minimum on time
- Low dropout mode
- Available in wettable flank package

*Available upon request

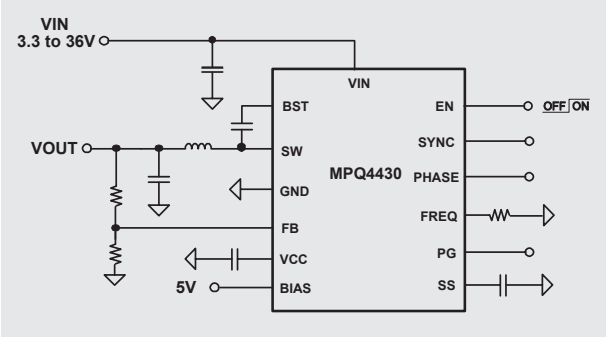

Available in a QFN-16 (3mmx4mm) Package

KEY SPECS

Input Voltage	3.3 ... 36 V
Output Current	1 ... 3.5 A
Switching Frequency	300 kHz ... 2.5 MHz
HS/LS FET $R_{DS(ON)}$	90 mΩ / 40 mΩ
Package	QFN-16 3x4

MPQ4430 FAMILY – SPECIFICATIONS

PART NUMBER	I_{OUT}	V_{IN}	I_Q	STATUS
MPQ4430	3.5 A	3.3 V ... 36 V	10 µA	Production
MPQ4431	1 A			Production
MPQ4432	2.2 A			Production
MPQ4433	3 A			Production
MPQ4436	6 A	3.3 V ... 42 V		Sampling 4Q17

Contact for information: Mr. Kinn · Tel.: +49(0)7452-6007-21 · e-mail: d.kinn@endrich.com

2.4 MHZ, 3A X 2CH SYNCHRONOUS BUCK CONVERTER FOR POL

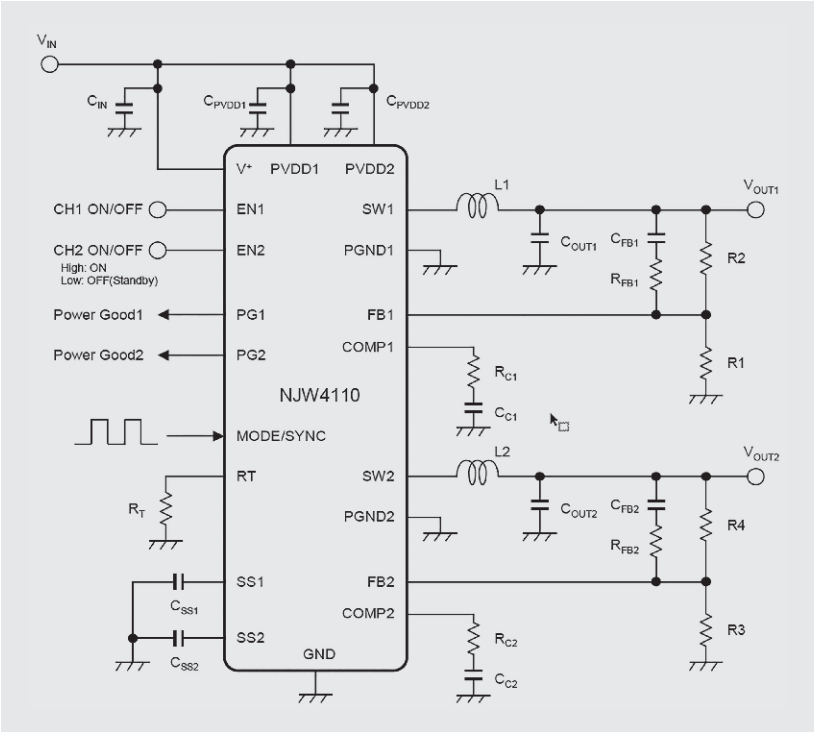

The NJW4110 is a synchronous 2ch buck converter with 3A MOSFET. The switching oscillating frequency is adjustable from 100 kHz to 2,4 MHz. Also, it can be synchronized with an external clock. The NJW4110 can be selected PFM to ensure high efficiency at light load. The NJW4110 has a single oscillator and operates an Ant-Phase switching to reduce input ripple current. Each buck converters have independent enable functions, soft start functions, over current protection and power good functions. The protection functions are UVLO and thermal shutdown circuit. It is suitable for power supply circuit of SoC, DSP, DDR memory and so on that need fast transient response.

FEATURES

- 2ch Synchronous Rectification
- Current Mode Control
- Operating Voltage Range: 2.7 V to 5.5 V
- Switching Current: 3.3 A min.
- Adjustable Oscillating Frequency: 100 kHz to 2.4 MHz
- External Clock Synchronization
- PWM Control
- Maximum Duty Cycle 100%
- High Efficiency at Light Loads (Selectable)
- Low Iq at Sleep Mode: 500 A typ.
- Anti-Phase Switching
- External Compensation Circuit
- Correspond to Ceramic Capacitor (MLCC)
- Adjustable Soft Start Function
- UVLO (Under Voltage Lockout)
- Over Current Protection (Hiccup type)
- Thermal Shutdown Protection
- Power Good Function
- Standby Function
- Package Outline: EQFN24-LE

APPLICATIONS

- Power supply for SoC, ASIC, DDR and the others

Contact for information: Mr. Kinn · Tel.: +49(0)7452-6007-21 · e-mail: d.kinn@endrich.com

ISOLATION AMPLIFIER WITH VIDEO DRIVER

NJM41005 is the isolation amplifier that has been developed in the video signal applications. It can remove the common-mode noise of the signal by the isolation amplifier. In addition, it has a built-in 75 Ω driver, well suited to the interface of CAR AV.

EQUIVALENT CIRCUIT BLOCK DIAGRAM

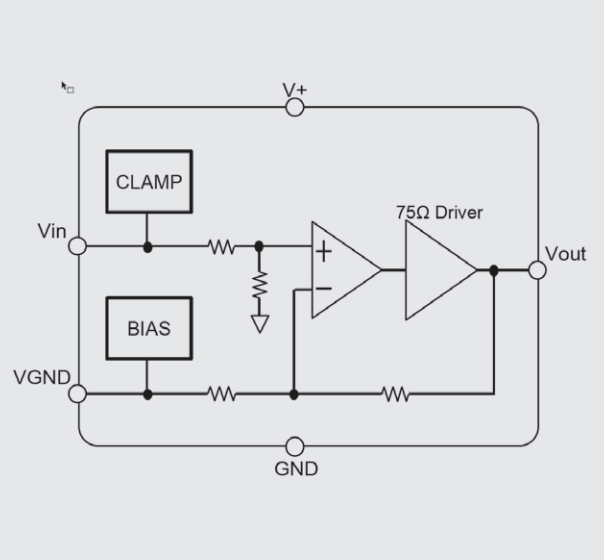

APPLICATION CIRCUIT (DC COUPLING)

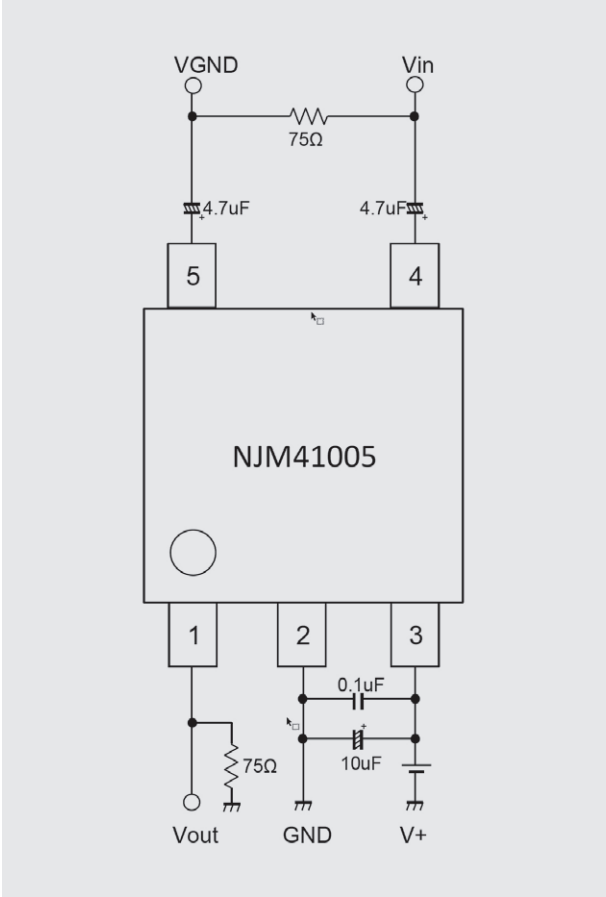

FEATURES

- Operating Voltage 4.5 to 5.5 V
- Operating Temperature -40 to 105°C
- Common Mode Rejection Ratio -55 dB typ.
- 75 Ω Driver
- DC Coupling, AC Coupling
- Voltage Gain 0 dB typ.
- Frequency Characteristics 0 dB at 10 MHz
- Bipolar Technology
- Package Outline SOT-23-5

APPLICATIONS

- Car Navigation

Contact for information: Mr. Kinn · Tel.: +49(0)7452-6007-21 · e-mail: d.kinn@endrich.com

HEADQUARTERS

ENDRICH Bauelemente Vertriebs GmbH · P.O.Box 1251 · D-72192 Nagold
T +49 (0) 7452 6007-0 · F +49 (0) 7452 6007-70
endrich@endrich.com · www.endrich.com

Mitglied im FBDi Fachverband Bauelemente Distribution e.V.

Certified acc. to ISO 9001/14001

SALES OFFICES IN EUROPE

France:
Paris: T +33/2 41 80 19 87 · france@endrich.com

Austria & Slovenia
Brunn am Gebirge: T +43/1 665 25 25 · austria@endrich.com

Hungary:
Budapest: T +361/2 97 41 91 · hungary@endrich.com

Bulgaria:
Sofia: bulgaria@endrich.com

Romania:
Timisoara: T +40/356 11 41 88 · romania@endrich.com

Switzerland – Novitronic:
Zurich: T +41/44 306 91 91 · info@novitronic.ch

Spain:
Barcelona: T +34/93 217 31 44 · spain@endrich.com